TAV10.P

TESTA AD ANGOLO · *ANGLE HEAD*

PESO *WEIGHT*

40 — 6,4 KG
50 — 8,5 KG

ROTAZIONE *ROTATION*

IN → OUT
INPUT — OUTPUT

CARATTERISTICHE *FEATURES*

Ø10 | M8 | 550 N | 1-1 | 8000 RPM | 12 Nm

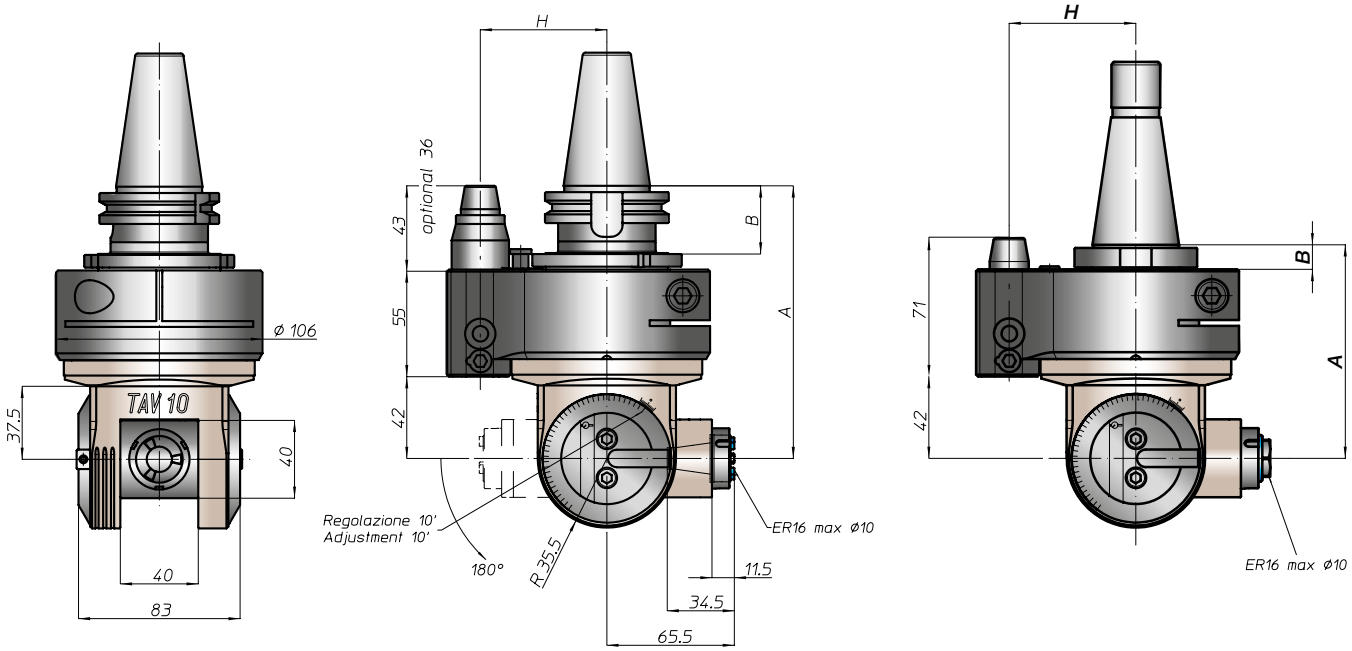

CONO *SHANK*	DIN69871			ANSIB5.50		BT		HSK DIN69893			CAPTO ISO26623			KM			DIN2080		NMTB ANSIB5.18	
SIZE	40	45	50	40	50	40	50	63	80	100	C5	C6	C8	63	80	100	40	50	40	50
A	140			140		140	148	149			144			140			113	116	113	116
B	35			35		35	45	44	46			39	41				13	16	13	16
H STANDARD	65	80		65	80	65	80	65	80		65		80	65	80		65	80	65	80
H OPTIONAL		110			110		110		110				110		110			110		110

For DIN69871, ANSIB5.50 and BT, dual contact as option